Airbac Tensioners

Technical specification & ordering numbers

Technical Specifications

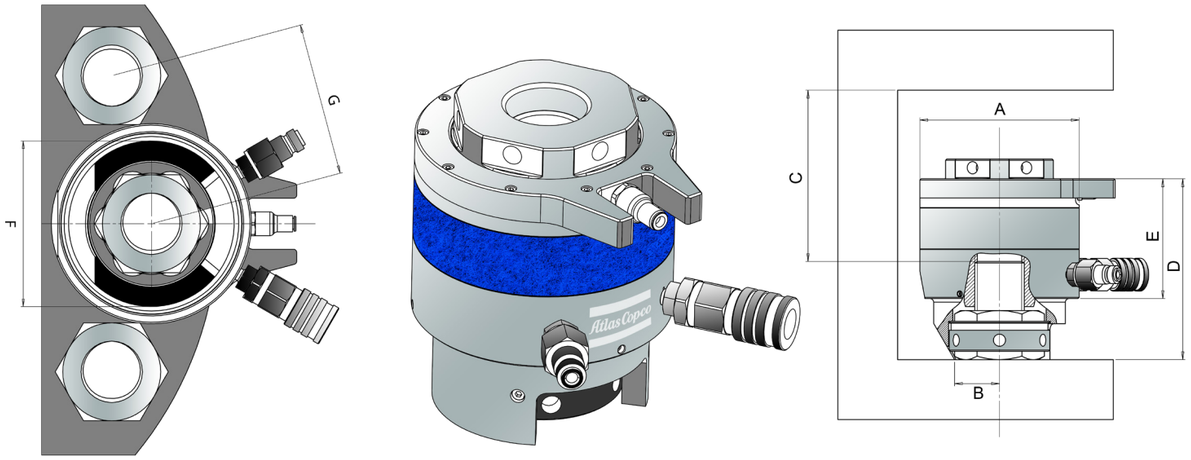

Maximum Working Pressure = 1500bar

Tool Identification	Thread Size	Tentec Complete Tool No	Ordering No	Dimensions						
				A	B	C	D	E	F	G
AB-01	3/4"	HTT.18001.034	8434220431	73.5	21	75	79	53	62	49.5
	M20 x 2.5	HTT.18001.020	8434220432		21	74	79		63	49.5
	7/8"	HTT.18001.078	8434220433		24	72	79		63	53
	M22 x 2.5	HTT.18001.022	8434220434		24	72	79		63	53
	1"	HTT.18001.100	8434220435		24	75.75	86		69	58.5
	M24 x 3	HTT.18001.024	8434220436		24	77	86		69	58.5
	1 1/8"	HTT.18001.118	8434220437		27	73.5	87		74	63.5
	M27 x 3	HTT.18001.027	8434220438		27	75	87		74	63.5
AB-02	1 1/8"	HTT.18002.118	8434220440	102	27	97.5	104	66	82	67.5
	M27 x 3	HTT.18002.027	8434220441		27	99	104		82	67.5
	M30 x 3.5	HTT.18002.030	8434220442		32	97	105		85	69
	1 1/4"	HTT.18002.114	8434220443		31	97.5	107		85	72
	M33 x 3.5	HTT.18002.033	8434220444		31	96	107		85	72
	1 3/8"	HTT.18002.138	8434220445		34	97.25	110		91	78
	M36 x 4	HTT.18001.036	8434220446		34	96	110		91	78
	1 1/2"	HTT.18002.112	8434220447		36.5	96	112		90	80
	M39 x 4	HTT.18002.039	8434220448		36.5	95	112		90	80
AB-03	M36 x 4	HTT.18003.036	8434220450	133	36.5	130.5	153	100	97	83.5
	1 1/2"	HTT.18003.112	8434220451		36.5	128.5	153		97	83.5
	M39 x 4	HTT.18003.039	8434220452		36.5	127.5	153		97	83.5
	1 5/8"	HTT.18003.158	8434220453		37.5	123.25	151		110	92.5
	M42 x 4.5	HTT.18003.042	8434220454		37.5	122.5	151		110	92.5
	1 3/4"	HTT.18003.134	8434220455		40.5	129.25	160		115	98
	M45 x 4.5	HTT.18003.045	8434220456		40.5	128.5	160		115	98
	1 7/8"	HTT.18003.178	8434220457		42.5	126	160		116	101
	M48 x 5	HTT.18003.048	8434220458		42.5	125.5	160		116	101
	2"	HTT.18003.200	8434220459		50	123.75	161		120	106
	M52 x 5	HTT.18003.052	8434220460		50	122.5	161		120	106
AB-04	M42 x 4.5	HTT.18004.042	8434220462	163	43.5	134.25	161	100	130	108
	1 7/8"	HTT.18004.178	8434220463		43.5	128.75	161		130	108
	M48 x 5	HTT.18004.048	8434220464		43.5	128.25	161		130	108
	2"	HTT.18004.200	8434220465		46	124.5	160		124	108
	M52 x 5	HTT.18004.052	8434220466		46	123.25	160		124	108
	2 1/4"	HTT.18004.214	8434220467		55	124.25	166		134	118.5
	M56 x 5.5	HTT.18004.056	8434220468		55	125.25	166		134	118.5
	M60 x 5.5	HTT.18004.060	8434220469		54	143.75	188.5		150	127
	2 1/2"	HTT.18004.212	8434220470		58	124.75	173		147	130.5
	M64 x 6	HTT.18004.064	8434220471		58	124.25	173		147	130.5
AB-05	2 1/2"	HTT.18005.212	8434220473	193	64	138.25	184.25	111.25	147	130.5
	M64 x 6	HTT.18005.064	8434220474		64	137.75	184.25		147	130.5
	M68 x 6	HTT.18005.068	8434220475		80	141.75	192.25		160	138
	2 3/4"	HTT.18005.234	8434220476		72	146	198.25		161	143
	M72 x 6	HTT.18005.072	8434220477		72	143.75	198.25		161	143
	3"	HTT.18005.300	8434220478		77	138.75	197.25		170	153
	M76 x 6	HTT.18005.076	8434220479		77	138.75	197.25		170	153
AB-06	3"	HTT.18006.300	8434220481	233	77	141.75	200.25	111.25	170	153
	M76 x 6	HTT.18006.076	8434220482		77	141.75	200.25		170	153
	M80 x 6	HTT.18006.080	8434220483		78	138.75	201.25		178	155.5
	3 1/4"	HTT.18006.314	8434220484		78	136.25	201.25		182	165.5
	M85 x 6	HTT.18006.085	8434220485		78	133.75	201.25		182	165.5
	3 1/2"	HTT.18006.312	8434220486		86	136	207.25		191	174.5
	M90 x 6	HTT.18006.090	8434220487		86	134.75	207.25		191	174.5
	3 3/4"	HTT.18006.334	8434220488		99	137.5	215.25		210	189.5
	M95 x 6	HTT.18006.095	8434220489		99	137.75	215.25		210	189.5
	4"	HTT.18006.400	8434220490		105	137.25	221.25		220	200
	M100 x 6	HTT.18006.100	8434220491		105	138.75	221.25		220	200

Tool Identification	Thread Size	Complete Tool GA No	Ordering No	Conversion Kit No	Ordering No	Tool Load		Hydraulic Pressure Area		Stroke		Total Tool Weight		Load Cell Weight Only	
						kN	Ton	mm^2	In^2	mm	In	kg	lbs	kg	lbs
AB-01	3/4"	HTT.18001.034	8434220431	HTT.18001.201	4222260050	227.81	22.86	1518.75	2.35	10	0.394	2.70	5.94	1.63	3.59
	M20 x 2.5	HTT.18001.020	8434220432	HTT.18001.202	4222260051							2.70	5.94		
	7/8"	HTT.18001.078	8434220433	HTT.18001.203	4222260052							2.6	5.72		
	M22 x 2.5	HTT.18001.022	8434220434	HTT.18001.204	4222260053							2.62	5.76		
	1"	HTT.18001.100	8434220435	HTT.18001.205	4222260054							2.70	5.94		
	M24 x 3	HTT.18001.024	8434220436	HTT.18001.206	4222260055							2.75	6.05		
	1 1/8"	HTT.18001.118	8434220437	HTT.18001.207	4222260056							2.72	5.98		
	M27 x 3	HTT.18001.027	8434220438	HTT.18001.208	4222260057							2.80	6.16		
AB-02	1 1/8"	HTT.18002.118	8434220440	HTT.18002.200	4222260058	443.06	44.47	2953.73	4.58	10	0.394	5.57	12.25	3.02	6.64
	M27 x 3	HTT.18002.027	8434220441	HTT.18002.201	4222260059							5.64	12.41		
	M30 x 3.5	HTT.18002.030	8434220442	HTT.18002.202	4222260060							5.68	12.50		
	1 1/4"	HTT.18002.114	8434220443	HTT.18002.203	4222260061							5.50	12.10		
	M33 x 3.5	HTT.18002.033	8434220444	HTT.18002.204	4222260062							5.49	12.08		
	1 3/8"	HTT.18002.138	8434220445	HTT.18002.205	4222260063							5.56	12.23		
	M36 x 4	HTT.18001.036	8434220446	HTT.18002.206	4222260064							5.57	12.25		
	1 1/2"	HTT.18002.112	8434220447	HTT.18002.207	4222260065							5.59	12.30		
	M39 x 4	HTT.18002.039	8434220448	HTT.18002.208	4222260066							5.71	12.56		
AB-03	M36 x 4	HTT.18003.036	8434220450	HTT.18003.300	4222260067	810.85	81.38	5405.67	8.38	10	0.394	11.83	26.03	6.52	14.34
	1 1/2"	HTT.18003.112	8434220451	HTT.18003.301	4222260068							11.67	25.67		
	M39 x 4	HTT.18003.039	8434220452	HTT.18003.302	4222260069							11.72	25.78		
	1 5/8"	HTT.18003.158	8434220453	HTT.18003.303	4222260070							11.37	25.01		
	M42 x 4.5	HTT.18003.042	8434220454	HTT.18003.304	4222260071							11.52	25.34		
	1 3/4"	HTT.18003.134	8434220455	HTT.18003.305	4222260072							11.66	25.65		
	M45 x 4.5	HTT.18003.045	8434220456	HTT.18003.306	4222260073							11.71	25.76		
	1 7/8"	HTT.18003.178	8434220457	HTT.18003.307	4222260074							11.52	25.34		
	M48 x 5	HTT.18003.048	8434220458	HTT.18003.308	4222260075							11.61	25.54		
	2"	HTT.18003.200	8434220459	HTT.18003.309	4222260076							11.16	24.55		
	M52 x 5	HTT.18003.052	8434220460	HTT.18003.310	4222260077							11.18	24.60		
AB-04	M42 x 4.5	HTT.18004.042	8434220462	HTT.18004.300	4222260078	1273.49	127.81	8489.93	13.16	10	0.394	18.32	40.30	9.51	20.92
	1 7/8"	HTT.18004.178	8434220463	HTT.18004.301	4222260079							17.87	39.31		
	M48 x 5	HTT.18004.048	8434220464	HTT.18004.302	4222260080							17.97	39.53		
	2"	HTT.18004.200	8434220465	HTT.18004.303	4222260081							17.53	38.57		
	M52 x 5	HTT.18004.052	8434220466	HTT.18004.304	4222260082							17.57	38.65		
	2 1/4"	HTT.18004.214	8434220467	HTT.18004.305	4222260083							17.87	39.31		
	M56 x 5.5	HTT.18004.056	8434220468	HTT.18004.306	4222260084							18.28	40.22		
	M60 x 5.5	HTT.18004.060	8434220469	HTT.18004.307	4222260085							20.52	45.14		
	2 1/2"	HTT.18004.212	8434220470	HTT.18004.308	4222260086							17.36	38.19		
	M64 x 6	HTT.18004.064	8434220471	HTT.18004.309	4222260087							17.71	38.96		
AB-05	2 1/2"	HTT.18005.212	8434220473	HTT.18005.400	4222260088	1829.47	183.61	12196.50	18.90	10	0.394	26.99	59.38	14.81	32.58
	M64 x 6	HTT.18005.064	8434220474	HTT.18005.401	4222260089							27.35	60.17		
	M68 x 6	HTT.18005.068	8434220475	HTT.18005.402	4222260090							28.05	61.71		
	2 3/4"	HTT.18005.234	8434220476	HTT.18005.403	4222260091							29.08	63.98		
	M72 x 6	HTT.18005.072	8434220477	HTT.18005.404	4222260092							29.33	64.53		
	3"	HTT.18005.300	8434220478	HTT.18005.405	4222260093							26.98	59.36		
	M76 x 6	HTT.18005.076	8434220479	HTT.18005.406	4222260094							27.76	61.07		
AB-06	3"	HTT.18006.300	8434220481	HTT.18006.500	4222260095	2644.13	265.37	17627.51	27.32	10	0.394	41.45	91.19	20.33	44.73
	M76 x 6	HTT.18006.076	8434220482	HTT.18006.501	4222260096							42.23	92.91		
	M80 x 6	HTT.18006.080	8434220483	HTT.18006.502	4222260097							41.54	91.39		
	3 1/4"	HTT.18006.314	8434220484	HTT.18006.503	4222260098							41.42	91.12		
	M85 x 6	HTT.18006.085	8434220485	HTT.18006.504	4222260099							41.95	92.29		
	3 1/2"	HTT.18006.312	8434220486	HTT.18006.505	4222260100							40.55	89.21		
	M90 x 6	HTT.18006.090	8434220487	HTT.18006.506	4222260101							41.20	90.64		
	3 3/4"	HTT.18006.334	8434220488	HTT.18006.507	4222260102							40.81	89.78		
	M95 x 6	HTT.18006.095	8434220489	HTT.18006.508	4222260103							42.00	92.40		
	4"	HTT.18006.400	8434220490	HTT.18006.509	4222260104							40.88	89.94		
	M100 x 6	HTT.18006.100	8434220491	HTT.18006.510	4222260105							41.79	91.94		

Designs and specifications are subject to change without notice or obligation. Read all safety instructions in the manual before usage.
AB-01 and AB-02 are manual retract tensioners.

– EN © Atlas Copco AB, Stockholm, Sweden 2019

Atlas Copco AB

(publ) SE-105 23 Stockholm, Sweden
Phone: +46 8 743 80 00
Reg. no: 556014-2720

atlascopco.com